Eagleman A Hydraulic Unit

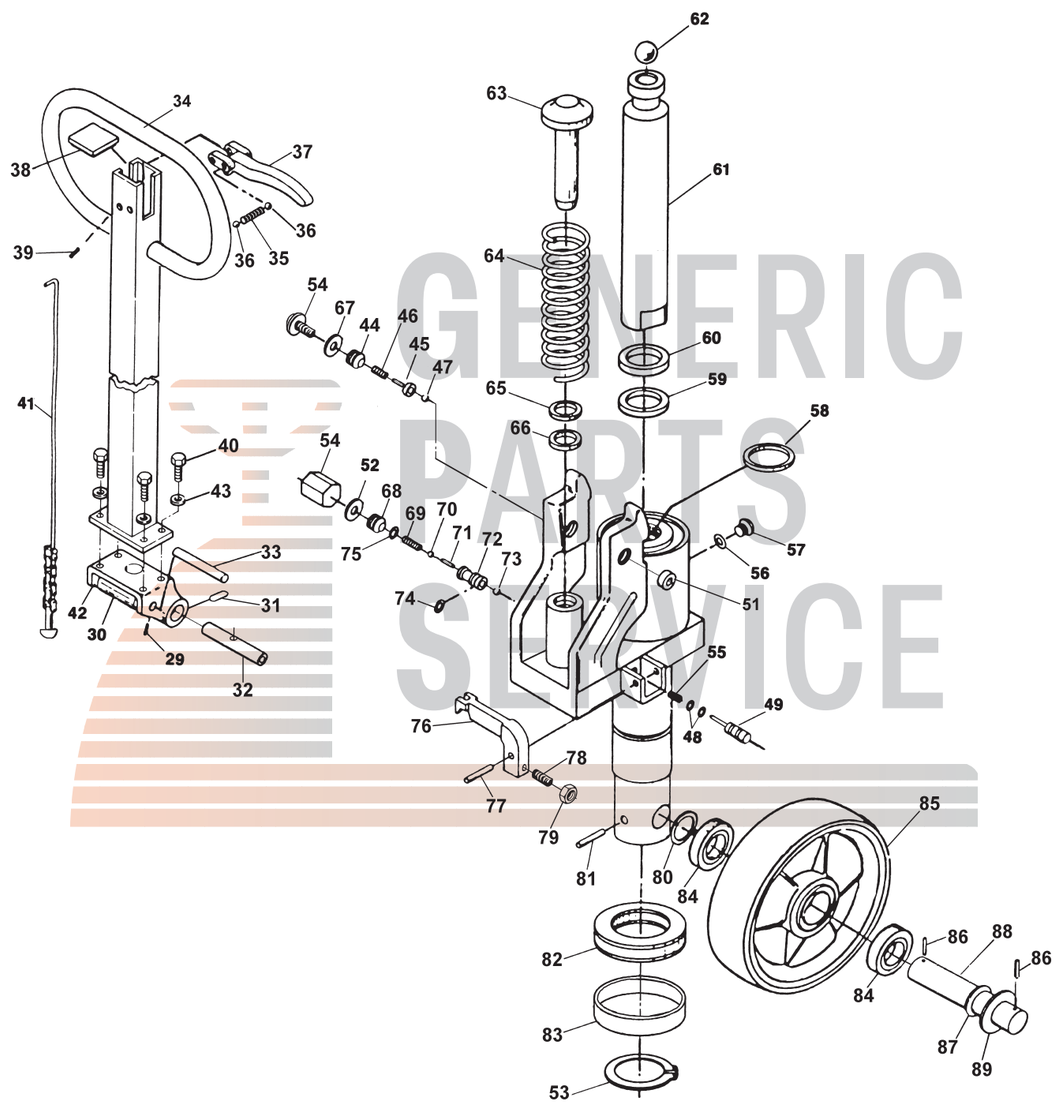

GENERIC PARTS SERVICE

All manufacturers' names, part numbers and descriptions are used for reference purposes only.
We do not imply that any parts are the products of a particular manufacturer. Copyright © 2022 by GPS, Inc. All rights reserved.

www.GenericParts.com
800-331-0839
Fax: 800-366-5939
GENERIC PARTS SERVICE

Eagleman A Hydraulic Unit

Item		Part No.	Description
29		A129	Pin
30		A130	Roller
31		A131	Roll Pin
32		A132	Handle Axle
33		A133	Roller Pin
34		A134	Handle Frame
		A194	Handle Assembly
35		A135	Spring
36		A136	Ball
37		A137	Control Lever
38		A138	Cap
39		A139	Roll Pin
40		A140	Bolt
41		A141	Rod and Chain (Orange Jack)
		A141-New	Rod and Chain (Grey Jack)
42		A142	Bracket
43		A143	Lock Washer
44	C	A144	Plug
45	C	A145	Overload Valve
46	C	A146	Spring
47	C	A147	Ball
48		A148	O-Ring
49		A149	Release Valve
50		A150	Nut
51		A151	Bushing
52	B	A152	Washer
53		A153	Snap Ring
54		A154	Plug Bolt
55		A155	Spring
56		A156	O-Ring
57		A157	Filler Screw
58	A	A158	Top Seal
59	A	A159	Bottom Seal
60	A	A160	Wiper
61		A161	Lift Piston
62		A162	Ball
63		A163	Piston
64		A164	Spring
65	A	A165	Wiper

Item		Part No.	Description
66	A	A166	Seal
67	C	A167	O-Ring
68	B	A168	Plug Bolt
69	B	A169	Spring
70	B	A170	Ball
71	B	A171	Pin
72	B	A172	Valve
73	B	A173	Ball
74	B	A174	O-Ring
75	B	A175	O-Ring
76		A176	Release Valve Lever
77		A177	Roll Pin
78		A178	Adjust Screw
79		A179	Lock Nut
80		A180	Washer
81		A181	Roll Pin
82		A182	Thrust Bearing
83		A183	Bearing Holder
84		A184	Bearing
85		A185-A	Steer Wheel Assembly, Red Ultra Poly On Aluminum Hub W/ Bearings, 8" Diameter
		A185-B	Steer Wheel Assembly, Poly On Nylon Hub W/ Bearings, 8" Diameter
		A185-C	Steer Wheel Assembly, Nylon W/ Bearings, 8" Diameter
		A185-D	Steer Wheel Assembly, Steel W/ Bearings, 8" Diameter
86		A186	Roll Pin
87		A187	Washer
88		A188	Steer Wheel Axle
89		A189	Washer
KITS	A	A191	Seal Kit
KITS	B	A192	Valve Kit
KITS	C	A193	Overload Kit
		HU EA A195	Rebuilt Hydraulic Unit - Exchange

All manufacturers' names, part numbers and descriptions are used for reference purposes only.
We do not imply that any parts are the products of a particular manufacturer. Copyright © 2022 by GPS, Inc. All rights reserved.